EOLP-1380-10/20

1310nm SFP+ single-Mode Transceiver, With Diagnostic Monitoring
Fiber Channel 8.5G, 4.25G, 2.125G, 1.0625G
Duplex SFP+ Transceiver, RoHS 6 Compliant

Features

- Operating data rate up to 8.5Gbps
- 1310nm DFB-LD Transmitter
- Distance up to 20km
- Single 3.3V Power supply and TTL Logic Interface
- Duplex LC Connector Interface
- Hot Pluggable
- Compliant with MSA SFP+ Specification SFF-8431
- Compliant with 8.5G FC-PI-4 800-SM-LC-L FC standard
- Compliant with 4.25G FC-PI-4 400-SM-LC-L FC standard
- Compliant with 2.125G FC-PI-4 200-SM-LC-L FC standard
- Compliant with 1.0625G FC-PI-4 100-SM-LC-L FC standard
- Operating Case Temperature

  Extended: -5℃~+70℃

Applications

- 1000 Base-LX Ethernet
- 8XFC at 8.5Gbps
- 4XFC at 4.25Gpbs
- 2XFC at 2.125Gpbs
- 1xFC at 1.0625Gbps
- Other optical links

Eoptolink

Ordering information

Part No.	Data Rate	Laser	Fiber Type	Distance	Optical Interface	DDMI
EOLP-1380-10*Note1	1.0625Gbps to 8.5Gbps	1310nm DFB	SMF	10km	LC	YES
EOLP-1380-20* Note1	1.0625Gbps to 8.5Gbps	1310nm DFB	SMF	20km	LC	YES

Note1: Operating case temperature range is -5℃~+70℃.

Regulatory Compliance

Product Certificate	Certificate Number	Applicable Standard
TUV	R50135086	EN 60950-1:2006+A11+A1+A12
		EN 60825-1:2007
		EN 60825-2:2004+A1+A2
UL	E317337	UL 60950-1
		CSA C22.2 No. 60950-1-07
EMC CE	AE 50135430 0001	EN 55022:2006
		EN 55024:1998+A1+A2
CB	JPTUV-024038-M1	IEC 60825-2
		IEC 60950-1
FCC	WTF13F0503735E	47 CFR PART 15 OCT., 2010
	WTF13F0503732E	47 CFR PART 15 OCT., 2010
FDA	1230816-000	CDRH 1040.10
ROHS	RLSZF00163462	2011/65/EU

Product Description

The EOLP-1380-XX series single mode transceiver is small form factor pluggable module for serial optical data communications such as X1/X2/X4/X8 Fiber Channel. It is with the SFP+ 20-pin connector to allow hot plug capability.

This module is designed for single mode fiber and operates at a nominal wavelength of 1310 nm. The transmitter section uses a 1310nm multiple quantum well DFB laser and is a class 1 laser compliant according to International Safety Standard IEC-60825.

The receiver section uses an integrated InGaAs detector preamplifier (IDP) mounted in an optical header and a limiting post-amplifier IC.

Absolute Maximum Ratings

Parameter	Symbol	Min.	Max.	Unit
Storage Temperature	T_S	-40	+85	℃
Supply Voltage	V_{CC}	-0.5	3.6	V
Input Voltage	Vin	-0.5	Vcc	V
Output Current	Io	-	50	mA

Recommended Operating Conditions

Parameter	Symbol	Min.	Typical	Max.	Unit
Operating Case Temperature	T_C	-5		+70	℃
Power Supply Voltage	V_{CC}	3.15	3.3	3.45	V
Power Supply Current	I_{CC}			300	mA
Surge Current	I_{Surge}			+30	mA
Baud Rate	8XFC		8.5		Gbps
	4XFC		4.25		
	2XFC		2.125		
	1XFC		1.0625		

Performance Specifications – Electrical

Parameter	Symbol	Min.	Typ.	Max	Unit	Notes
Transmitter						
CML Inputs(Differential)	Vin	150		1200	mVpp	AC coupled inputs
Input AC Common Mode Voltage		0		25	mV	RMS
Input Impedance (Differential)	Zin	85	100	115	ohm	Rin > 100 kohms @ DC
Differential Input S-parameter	$S_{DD}11$	-	-	-10	dB	
Differential to Common Mode Conversion	$S_{CD}11$	-	-	-10	dB	
Tx_DISABLE Input Voltage – High		2.0		Vcc+0.3	V	
Tx_DISABLE Input Voltage – Low		0		0.8	V	
Tx_FAULT Output Voltage – High		2.0		Vcc	V	Io = 400μA; Host Vcc
Tx_FAULT Output Voltage – Low		0		0.5	V	Io = -4.0mA
Receiver						
CML Outputs (Differential)	Vout	350		700	mVpp	AC coupled outputs
Output AC Common Mode Voltage		0		15	mV	RMS
Output Impedance (Differential)	Zout	90	100	110	ohm	

Differential Output S-parameter	S_D22	-	-	-10	dB	
Rx_LOS Output Voltage – High		2.0		Vcc+0.3	V	Io = 400μA; Host Vcc
Rx_LOS Output Voltage – Low		0		0.8	V	Io = -4.0mA
MOD_DEF (2:0)	VoH	2.5			V	With Serial ID
	VoL	0		0.5	V	

Performance Specifications – Optical

EOLP-1380-10

Parameter		Symbol	Min.	Typical	Max.	Unit
9μm Core Diameter SMF Supported Distance					10	km
Data Rate					8.5	Gbps
Transmitter						
Centre Wavelength		λ_C	1270	1310	1355	nm
Spectral Width (-20dB)		Δλ			1	nm
Average Output Power		P_{out}	-8.2		+0.5	dBm
Extinction Ratio		ER	3.5			dB
Average Power of OFF Transmitter		P_{off}			-30	dBm
Side Mode Suppression Ratio		SMSR	30			dB
Input Differential Impedance		Z_{IN}	90	100	110	Ω
TX Disable	Disable		2.0		Vcc+0.3	V
	Enable		0		0.8	
TX Fault	Fault		2.0		V_{CC}+0.3	V
	Normal		0		0.8	
TX Disable Assert Time		t_off	-	-	10	us
TX_DISABLE Negate Time		t_on	-	-	1	ms
TX_BISABLE time to start reset		t_reset	10	-	-	us
Time to initialize, include reset of TX_FAULT		t_init	-	-	300	ms
TX_FAULT from fault to assertion		t_fault	-	-	100	us
Total Jitter		TJ	-	-	0.28	UI(p-p)
Data Dependant Jitter		DDJ	-	-	0.1	UI(p-p)
Uncorrelated Jitter		UJ	-	-	0.023	RMS
Receiver						
Centre Wavelength		λ	1260		1565	nm
Sensitivity		P_{min}			-15	dBm
Receiver Overload		P_{max}	0.5			dBm
Optical Return Loss		ORL			-12	dB
LOS De-Assert		LOS_D			-17	dBm

LOS Assert		LOS_A	-29			dBm
LOS	High		2.0		V_{CC}+0.3	V
	Low		0		0.8	

EOLP-1380-20

Parameter		Symbol	Min.	Typical	Max.	Unit
9μm Core Diameter SMF Supported Distance					20	km
Data Rate					8.5	Gbps
Transmitter						
Centre Wavelength		λ_C	1270	1310	1355	nm
Spectral Width (-20dB)		Δλ			1	nm
Average Output Power		P_{out}	-4		0	dBm
Extinction Ratio		ER	3.5			dB
Average Power of OFF Transmitter		P_{off}			-30	dBm
Side Mode Suppression Ratio		SMSR	30			dB
Input Differential Impedance		Z_{IN}	90	100	110	Ω
TX Disable	Disable		2.0		Vcc+0.3	V
	Enable		0		0.8	
TX Fault	Fault		2.0		V_{CC}+0.3	V
	Normal		0		0.8	
TX Disable Assert Time		t_off	-	-	10	us
TX_DISABLE Negate Time		t_on	-	-	1	ms
TX_BISABLE time to start reset		t_reset	10	-	-	us
Time to initialize, include reset of TX_FAULT		t_init	-	-	300	ms
TX_FAULT from fault to assertion		t_fault	-	-	100	us
Total Jitter		TJ	-	-	0.28	UI(p-p)
Data Dependant Jitter		DDJ	-	-	0.1	UI(p-p)
Uncorrelated Jitter		UJ	-	-	0.023	RMS
Receiver						
Centre Wavelength		λ	1260		1565	nm
Sensitivity		P_{min}			-15	dBm
Receiver Overload		P_{max}	0.5			dBm
Optical Return Loss		ORL			-12	dB
LOS De-Assert		LOS_D			-17	dBm
LOS Assert		LOS_A	-29			dBm
LOS	High		2.0		V_{CC}+0.3	V
	Low		0		0.8	

SFP+ Transceiver Electrical Pad Layout

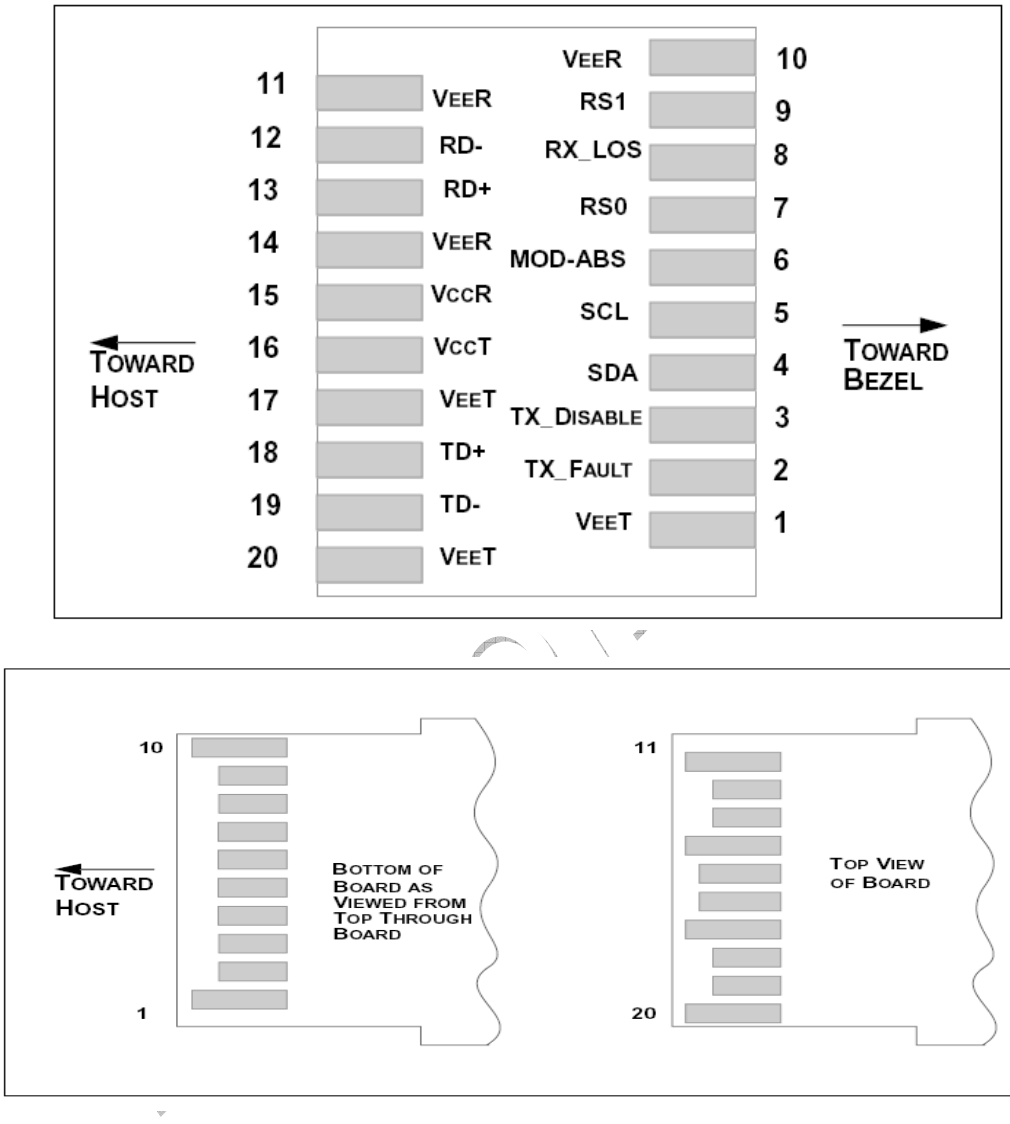

Pin Function Definitions

Pin Num.	Name	FUNCTION	Plug Seq.	Notes
1	VeeT	Transmitter Ground	1	Note 5
2	TX Fault	Transmitter Fault Indication	3	Note 1
3	TX Disable	Transmitter Disable	3	Note 2, Module disables on high or open
4	SDA	Module Definition 2	3	Data line for Serial ID.

5	SCL	Module Definition 1	3	Clock line for Serial ID.
6	MOD-ABS	Module Definition 0	3	Note 3
7	RS0	RX Rate Select (LVTTL).	3	This pin has an internal 30k pull down to ground. A signal on this pin will not affect module performance.
8	LOS	Loss of Signal	3	Note 4
9	RS1	TX Rate Select (LVTTL).	1	This pin has an internal 30k pull down to ground. A signal on this pin will not affect module performance.
10	VeeR	Receiver Ground	1	Note 5
11	VeeR	Receiver Ground	1	Note 5
12	RD-	Inv. Received Data Out	3	Note 6
13	RD+	Received Data Out	3	Note 7
14	VeeR	Receiver Ground	1	Note 5
15	VccR	Receiver Power	2	3.3V ± 5%, Note 7
16	VccT	Transmitter Power	2	3.3V ± 5%, Note 7
17	VeeT	Transmitter Ground	1	Note 5
18	TD+	Transmit Data In	3	Note 8
19	TD-	Inv. Transmit Data In	3	Note 8
20	VeeT	Transmitter Ground	1	Note 5

Notes:

1) TX Fault is an open collector/drain output, which should be pulled up with a 4.7K – 10KΩ resistor on the host board. Pull up voltage between 2.0V and VccT/R+0.3V. When high, output indicates a laser fault of some kind. Low indicates normal operation. In the low state, the output will be pulled to < 0.8V.

2) TX disable is an input that is used to shut down the transmitter optical output. It is pulled up within the module with a 4.7K – 10 KΩ resistor. Its states are:
Low (0 – 0.8V): Transmitter on
(>0.8, < 2.0V): Undefined
High (2.0 – 3.465V): Transmitter Disabled
Open: Transmitter Disabled

3) Module Absent, connected to VeeT or VeeR in the module.

4) LOS (Loss of Signal) is an open collector/drain output, which should be pulled up with a 4.7K –

10KΩ resistor. Pull up voltage between 2.0V and VccT/R+0.3V. When high, this output indicates the received optical power is below the worst-case receiver sensitivity (as defined by the standard in use). Low indicates normal operation. In the low state, the output will be pulled to < 0.8V.

5) VeeR and VeeT may be internally connected within the SFP+ module.

6) RD-/+: These are the differential receiver outputs. They are AC coupled 100Ω differential lines which should be terminated with 100Ω (differential) at the user SERDES. The AC coupling is done inside the module and is thus not required on the host board.

7) VccR and VccT are the receiver and transmitter power supplies. They are defined as 3.3V ±5% at the SFP+ connector pin. Maximum supply current is 300mA. Inductors with DC resistance of less than 1 ohm should be used in order to maintain the required voltage at the SFP+ input pin with 3.3V supply voltage. When the recommended supply-filtering network is used, hot plugging of the SFP+ transceiver module will result in an inrush current of no more than 30mA greater than the steady state value. VccR and VccT may be internally connected within the SFP+ transceiver module.

8) TD-/+: These are the differential transmitter inputs. They are AC-coupled, differential lines with 100Ω differential termination inside the module. The AC coupling is done inside the module and is thus not required on the host board.

EEPROM

The serial interface uses the 2-wire serial CMOS EEPROM protocol defined for the ATMEL AT24C02/04 family of components. When the serial protocol is activated, the host generates the serial clock signal (SCL). The positive edge clocks data into those segments of the EEPROM that are not write protected within the SFP+ transceiver. The negative edge clocks data from the SFP+ transceiver. The serial data signal (SDA) is bi-directional for serial data transfer. The host uses SDA in conjunction with SCL to mark the start and end of serial protocol activation. The memories are organized as a series of 8-bit data words that can be addressed individually or sequentially.

The Module provides diagnostic information about the present operating conditions. The transceiver generates this diagnostic data by digitization of internal analog signals. Calibration and alarm/warning threshold data is written during device manufacture. Received power monitoring, transmitted power monitoring, bias current monitoring, supply voltage monitoring and temperature monitoring all are implemented. If the module is defined as external calibrated, the diagnostic data are raw A/D values and must be converted to real world units using calibration constants stored in EEPROM locations 56 – 95 at wire serial bus address A2h. The digital diagnostic memory map specific data field define as following .For detail EEPROM information, please refer to the related document of SFF 8472 Rev 10.2.

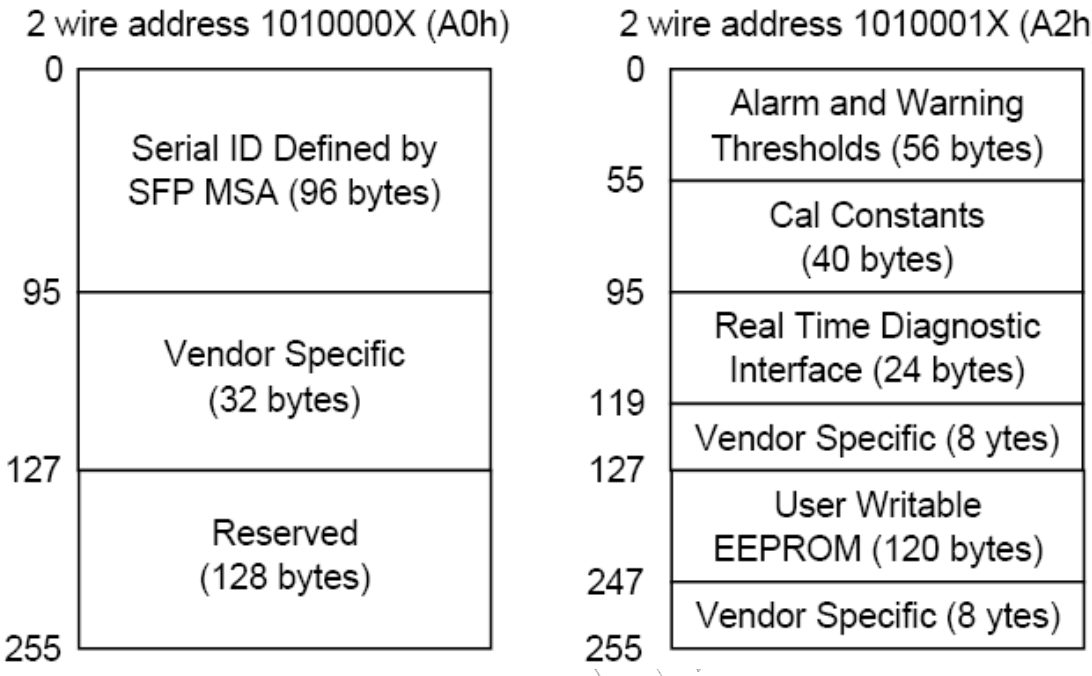

Recommend Circuit Schematic

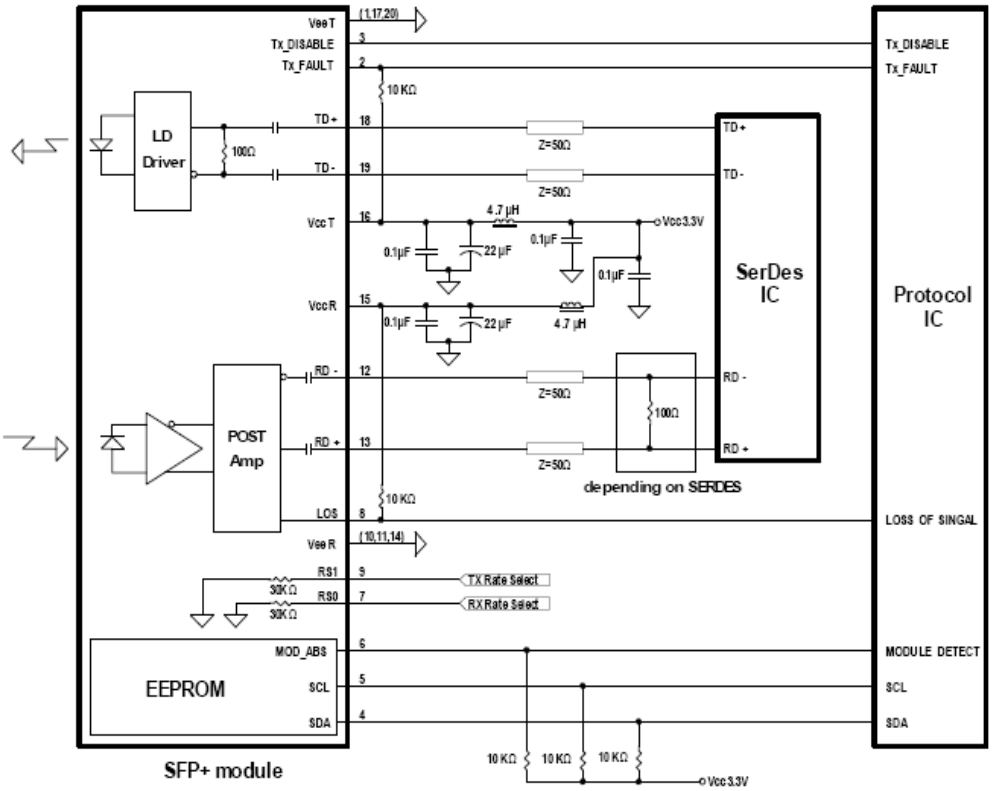

Mechanical Specifications

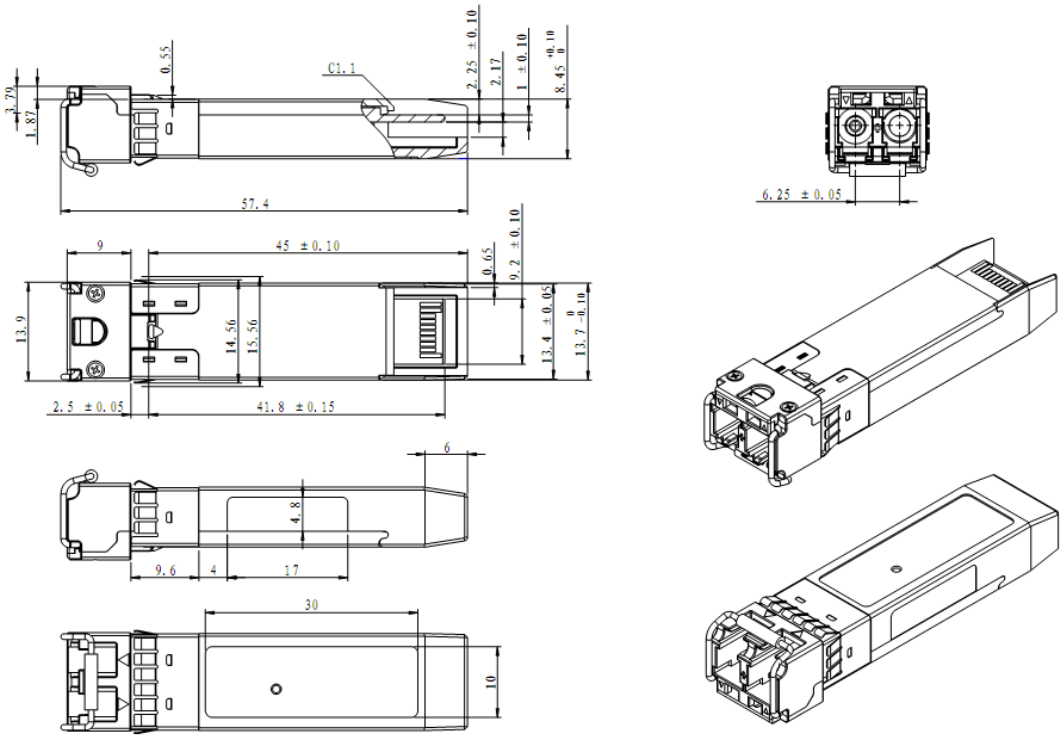

Eye Safety

This single-mode transceiver is a Class 1 laser product. It complies with IEC-60825 and FDA 21 CFR 1040.10 and 1040.11. The transceiver must be operated within the specified temperature and voltage limits. The optical ports of the module shall be terminated with an optical connector or with a dust plug.

Obtaining Document

You can visit our website:

http://www.eoptolink.com

Or contact Eoptolink Technology Inc., Ltd. Listed at the end of the documentation to get the latest document.

Revision History

Revision	Initiated	Reviewed	Approved	Revision History	Release Date
V2.a	Arvin	Kelly		Released.	2011-8-2
V3.a	Alex/Townie	Kelly		Update spelling mistake	2011-8-15

V3.b	Eason/Abby	Kelly/Fing		Update Pout of EOLP-1680-10 and LOSA&LOSD	Jan 6, 2014

Notice:

Eoptolink reserves the right to make changes to or discontinue any optical link product or service identified in this publication, without notice, in order to improve design and/or performance. Applications that are described herein for any of the optical link products are for illustrative purposes only. Eoptolink makes no representation or warranty that such applications will be suitable for the specified use without further testing or modification.

Contact:

Add: Floor 5 Building 2 No. 21 Gaopeng Avenue High-Tech District CHENGDU, SICHUAN 610041 P.R. CHINA

Tel: (+86) 028-85122709 ext 808 & 809

Fax: (+86) 028-85121912

Postal: 610041

E-mail:sales@eoptolink.com

http://www.eoptolink.com

Eoptolink