EOLP-1696-10X

CWDM SFP+ Single-Mode for 10GbE
Duplex SFP+ Transceiver
RoHS6 Compliant

Features

- Supports 9.95Gb/s to 11.1Gb/s bit rates
- Hot-Pluggable SFP+ footprint
- 18-Wavelength CWDM DFB Transmitter from 1270nm to 1610nm, with step 20nm
- 10dB Power Budget at Least
- Duplex LC connector
- Power Dissipation < 1.2W
- Case operation temperature range 0℃ to 70℃
- Compliant with SFP+ MSA Specification SFF-8431
- Build-in digital diagnostic functions
- Compliant with SFF-8472 MSA

Applications

- 10GBASE-LR/LW 10G Ethernet
- 10GBASE-LR at 10.31Gbps
- 10GBASE-LW at 9.95Gbps
- Other optical links

Ordering information

Part No.	Data Rate	Laser	Fiber	Power budget	Interface
EOLP-1696-10X*(note1)	10G	CWDM DFB	SMF	>10dB Power Budget	LC

Note1: X refers to CWDM Wavelength range 1270nm to 1610nm, X=A~R, denotes 1270nm to 1610nm.

CWDM* Wavelength (0~70C)

Band	Nomenclature	Wavelength(nm)		
		Min.	Typ.	Max.
O-band Original	A	1264	1270	1277.5
	B	1284	1290	1297.5
	C	1304	1310	1317.5
	D	1324	1330	1337.5
	E	1344	1350	1357.5
E-band Extended	F	1364	1370	1377.5
	G	1384	1390	1397.5
	H	1404	1410	1417.5
	I	1424	1430	1437.5
	J	1444	1450	1457.5
S-band Short Wavelength	K	1464	1470	1477.5
	L	1484	1490	1497.5
	M	1504	1510	1517.5
	N	1524	1530	1537.5
C-band Conventional	O	1544	1550	1557.5
L-band Long Wavelength	P	1564	1570	1577.5
	Q	1584	1590	1597.5
	R	1604	1610	1617.5

CWDM*: 18 Wavelengths from 1270nm to 1610nm, each step 20nm. Please contact EOPTOLINK to confirm whether the wavelength is available.

Regulatory Compliance

Feature	Standard	Performance
Electrostatic Discharge (ESD) to the Electrical Pins	MIL-STD-883G Method 3015.7	Class 1C (>1000 V)
Electrostatic Discharge to the Enclosure	EN 55024:1998+A1+A2 IEC-61000-4-2 GR-1089-CORE	Compliant with standards
Electromagnetic Interference (EMI)	FCC Part 15 Class B EN55022: 2006	Compliant with standards Noise frequency range:

	CISPR 22B: 2006 VCCI Class B	30MHz to 6GHz. Good system EMI design practice required to achieve Class B margins. System margins are dependent on customer host board and chassis design.
Immunity	EN 55024:1998+A1+A2 IEC 61000-4-3	Compliant with standards. 1KHz sine-wave, 80% AM, from 80MHz to 1GHz. No effect on transmitter/receiver performance is detectable between these limits.
Laser Eye Safety	FDA 21CFR 1040.10 and 1040.11 EN (IEC) 60825-1: 2007 EN (IEC) 60825-2: 2004+A1	CDRH compliant and Class I laser product. TüV Certificate No. 50135086
Component Recognition	UL and CUL EN60950-1: 2006	UL file E317337 TüV Certificate No. 50135086 (CB scheme)
RoHS6	2002/95/EC 4.1&4.2 2005/747/EC 5&7&13	Compliant with standards*note3

Note3: For update of the equipments and strict control of raw materials, EOPTOLINK has the ability to supply the customized products since Jan 1st, 2007, which meet the requirements of RoHS6 (Restrictions on use of certain Hazardous Substances) of European Union.

In light of item 5 in RoHS exemption list of RoHS Directive 2002/95/EC, Item 5: Lead in glass of cathode ray tubes, electronic components and fluorescent tubes.

In light of item 13 in RoHS exemption list of RoHS Directive 2005/747/EC, Item 13: Lead and cadmium in optical and filter glass. The three exemptions are being concerned for Eoptolink's transceivers, because Eoptolink's transceivers use glass, which may contain Pb, for components such as lenses, isolators, and other components.

Product Description

The EOLP-1696-XX series optical transceiver is designed for fiber communications application such as 10G Ethernet (10GBASE-LR), which fully compliant with the specification of SFP+ MSA SFF-8431.

This module is designed for single mode fiber and operates at a nominal wavelength of CWDM wavelength. There are four center wavelengths available from 1270nm to 1610nm, with each step 20nm. A guaranteed minimum optical link budget of 10 dB is offered.

The module is with the SFP+ connector to allow hot plug capability. Single 3.3V power supply is needed. The optical output can be disabled by LVTTL logic high-level input of TX_DIS. Loss of signal (RX_LOS) output is provided to indicate the loss of an input optical signal of receiver.

This module provides digital diagnostic functions via a 2-wire serial interface as defined by the SFF-8472 specification.

Absolute Maximum Ratings

Parameter	Symbol	Min	Typical	Max	Unit	Note
Maximum Supply Voltage 1	Vcc	-0.5		4.0	V	
Storage Temperature	T_S	-40		85	℃	
Case Operating Temperature	T_{OP}	0		70	℃	

Recommend Operating Condition

Parameter	Symbol	Min	Typical	Max	Units	Note
Operating Temperature	T_{OP}	0		70	℃	
Supply Voltage	Vcc	3.13	3.3	3.45	V	
Supply Current	Icc			350	mA	
Data Rate		9.95		11.1	Gbps	

Electrical Characteristics

(T_{OP} = 0 to 70℃, V_{CC} = 3.15 to 3.45V)

Parameter	Symbol	Min.	Typ.	Max	Unit	Notes
Transmitter						
CML Inputs(Differential)	Vin	150		1200	mVpp	1
Input Impedance (Differential)	Zin	85	100	115	ohm	
Tx_DISABLE Input Voltage - High		2		Vcc+0.3	V	
Tx_DISABLE Input Voltage - Low		0		0.8	V	
Tx_FAULT Output Voltage -- High		2		Vcc+0.3	V	
Tx_FAULT Output Voltage -- Low		0		0.8	V	
Receiver						
CML Outputs (Differential)	Vout	350		700	mVpp	1
Output Impedance (Differential)	Zout	85	100	115	ohms	
Rx_LOS Output Voltage - High		2		Vcc+0.3	V	
Rx_LOS Output Voltage - Low		0		0.8	V	
MOD_DEF (0:2)	VoH	2.5			V	2
	VoL	0		0.5	V	

Notes:

1. After internal AC coupling.
2. Reference the SFF-8472 MSA.

Optical Characteristics

(T_{OP} = 0 to 70℃, V_{CC} = 3.15 to 3.45V)

Parameter	Symbol	Min	Typical	Max	Unit	Note
Transmitter						
Output Opt. Pwr: 9/125 SMF	Pout	-5		0	dBm	1
Optical Extinction Ratio	ER	3.5			dB	
Optical Wavelength	λ	λc–6	λc	λc+7.5	nm	2
-20dB Spectrum Width	Δλ			1	nm	
Side Mode Suppression Ratio	SMSR	30			dB	
Transmitter and Dispersion Penalty	TDP			2	dB	
Average Launch Power of OFF Transmitter	P_{OFF}			-30	dBm	
TX Jitter Generation (Peak-to-Peak)	TXj			0.1	UI	
TX Jitter Generation (RMS)	TXj RMS			0.01	UI	
Receiver						
Receiver Sensitivity @ 10.7Gb/s	Pmin			-15	dBm	3
Maximum Input Power	Pmax	+0.5			dBm	
Optical Center Wavelength	λ	1260		1620	nm	
Receiver Reflectance	Rrf			-27	dB	
LOS De-Assert	LOS_D			-16	dBm	
LOS Assert	LOS_A	-28			dBm	
LOS Hysteresis		1			dB	

Notes:

1. Output power is coupled into a 9/125μm SMF.
2. ITU-T G.694.2 CWDM wavelength from 1270nm to 1610nm, each step 20nm.
3. Average received power; BER less than 1E-12 and PRBS 2^{31}-1 test pattern.

SFP+ Transceiver Electrical Pad Layout

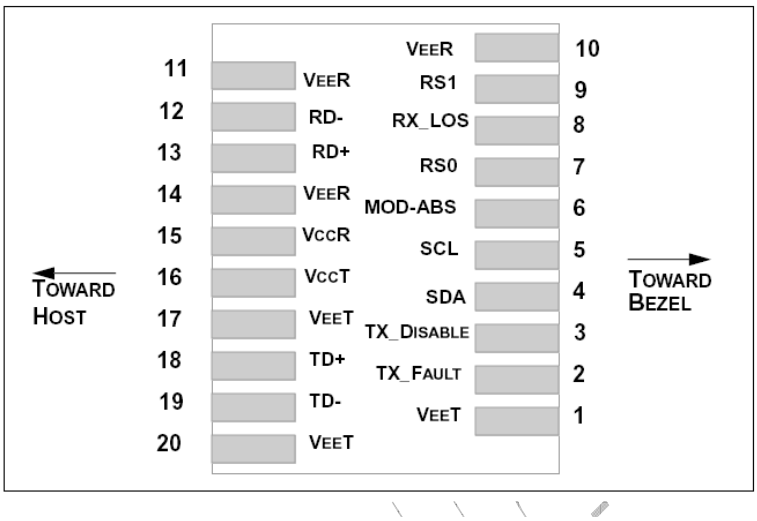

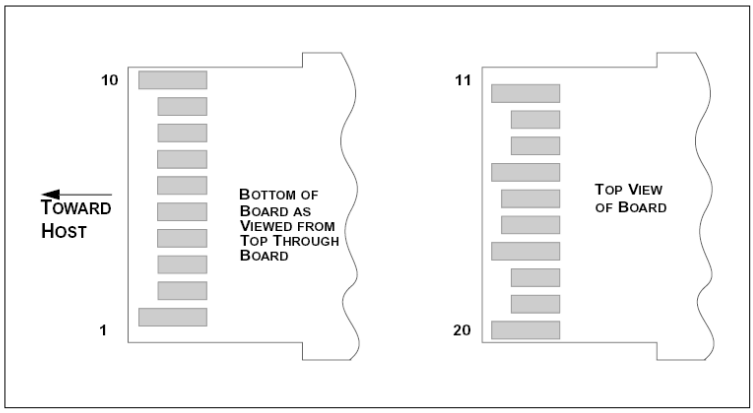

Pin Function Definitions

Pin Num.	Name	Function	Plug Seq.	Notes
1	VeeT	Transmitter Ground	1	Note 5
2	TX Fault	Transmitter Fault Indication	3	Note 1
3	TX Disable	Transmitter Disable	3	Note 2, Module disables on high or open
4	SDA	Module Definition 2	3	Data line for Serial ID.
5	SCL	Module Definition 1	3	Clock line for Serial ID.

6	MOD-ABS	Module Definition 0	3	Note 3
7	RS0	RX Rate Select (LVTTL).	3	This pin has an internal 30k pull down to ground. A signal on this pin will not affect module performance.
8	LOS	Loss of Signal	3	Note 4
9	RS1	TX Rate Select (LVTTL).	1	This pin has an internal 30k pull down to ground. A signal on this pin will not affect module performance.
10	VeeR	Receiver Ground	1	Note 5
11	VeeR	Receiver Ground	1	Note 5
12	RD-	Inv. Received Data Out	3	Note 6
13	RD+	Received Data Out	3	Note 6
14	VeeR	Receiver Ground	1	Note 5
15	VccR	Receiver Power	2	3.3V ± 5%, Note 7
16	VccT	Transmitter Power	2	3.3V ± 5%, Note 7
17	VeeT	Transmitter Ground	1	Note 5
18	TD+	Transmit Data In	3	Note 8
19	TD-	Inv. Transmit Data In	3	Note 8
20	VeeT	Transmitter Ground	1	Note 5

Notes:

1) TX Fault is an open collector/drain output, which should be pulled up with a 4.7K – 10KΩ resistor on the host board. Pull up voltage between 2.0V and VccT/R+0.3V. When high, output indicates a laser fault of some kind. Low indicates normal operation. In the low state, the output will be pulled to < 0.8V.

2) TX disable is an input that is used to shut down the transmitter optical output. It is pulled up within the module with a 4.7K~10 K Ω resistor. Its states are:
Low (0 – 0.8V): Transmitter on
(>0.8, < 2.0V): Undefined
High (2.0 – 3.465V): Transmitter Disabled
Open: Transmitter Disabled

3) Modulation Absent, connected to VeeT or VeeR in the module.

4) LOS (Loss of Signal) is an open collector/drain output, which should be pulled up with a 4.7K – 10KΩ resistor. Pull up voltage between 2.0V and VccT/R+0.3V. When high, this output indicates the received optical power is below the worst-case receiver sensitivity (as defined by the standard in use). Low indicates normal operation. In the low state, the output will be pulled to < 0.8V.

5) VeeR and VeeT may be internally connected within the SFP+ module.

6) RD-/+: These are the differential receiver outputs. They are AC coupled 100Ω differential lines which should be terminated with 100Ω (differential) at the user SERDES. The AC coupling is done inside the module and is thus not required on the host board. The voltage swing on these lines will be between 370 and 700 mV differential (185 –350 mV single ended) when properly terminated.

7) VccR and VccT are the receiver and transmitter power supplies. They are defined as 3.3V ±5% at the SFP+ connector pin. Maximum supply current is 300mA. Recommended host board power supply filtering is shown below. Inductors with DC resistance of less than 1 ohm should be used in order to maintain the required voltage at the SFP+ input pin with 3.3V supply voltage. When the recommended supply-filtering network is used, hot plugging of the SFP+ transceiver module will result in an inrush current of no more than 30mA greater than the steady state value. VccR and VccT may be internally connected within the SFP+ transceiver module.

8) TD-/+: These are the differential transmitter inputs. They are AC-coupled, differential lines with 100Ω differential termination inside the module. The AC coupling is done inside the module and is thus not required on the host board. The inputs will accept differential swings of 150 – 1200 mV (75 – 600mV single-ended), though it is recommended that values between 150 and 1200 mV differential (75 – 600mV single-ended) be used for best EMI performance.

EEPROM

The serial interface uses the 2-wire serial CMOS EEPROM protocol defined for the ATMEL AT24C02/04 family of components. When the serial protocol is activated, the host generates the serial clock signal (SCL). The positive edge clocks data into those segments of the EEPROM that are not writing protected within the SFP+ transceiver. The negative edge clocks data from the SFP+ transceiver. The serial data signal (SDA) is bi-directional for serial data transfer. The host uses SDA in conjunction with SCL to mark the start and end of serial protocol activation. The memories are organized as a series of 8-bit data words that can be addressed individually or sequentially.

The Module provides diagnostic information about the present operating conditions. The transceiver generates this diagnostic data by digitization of internal analog signals. Calibration and alarm/warning threshold data is written during device manufacture. Received power monitoring, transmitted power monitoring, bias current monitoring, supply voltage monitoring and temperature monitoring all are implemented. If the module is defined as external calibrated, the diagnostic data are raw A/D values and must be converted to real world units using calibration constants stored in EEPROM locations 56 – 95 at wire serial bus address A2H. The digital diagnostic memory map specific data field define as following .For detail EEPROM information,

please refer to the related document of SFF 8472 Rev 10.3.

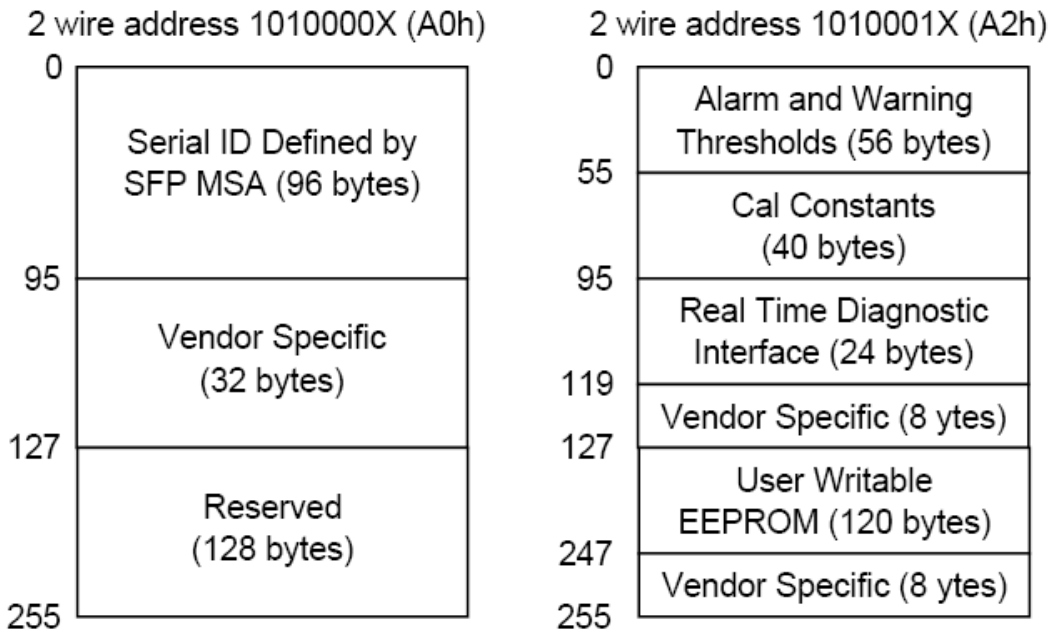

EEPROM Serial ID Memory Contents

Accessing Serial ID Memory uses the 2 wire address 1010000X (A0h). Memory Contents of Serial ID are shown in Table 1.

Table 1 Serial ID Memory Contents

Addr.	Size (Bytes)	Name of Field	Hex	Description
		BASE ID FIELDS		
0	1	Identifier	03	SFP
1	1	Ext. Identifier	04	SFP function is defined by serial ID only
2	1	Connector	07	LC Connector
3-10	8	Transceiver	20 00 00 00 00 00 01 00	Transmitter Code
11	1	Encoding	06	64B/66B
12	1	BR, Nominal	67	10.3Gbps
13	1	Reserved	00	
14	1	Length (9µm)km	0A	Transceiver transmit distance
15	1	Length(9µm)100m	00	
16	1	Length (50µm) 10m	00	
17	1	Length(62.5µm)10m	00	
18	1	Length (Copper)	00	Not compliant
19	1	Reserved	00	
20-35	16	Vendor name	45 4F 50 54 4F 4C 49	EOPTOLINK INC.

			4E 4B 20 49 4E 43 20 20 20	(ASCII)
36	1	Reserved	00	
37-39	3	Vendor OUI	00 00 00	
40-55	16	Vendor PN	45 4F 4C 50 2D 31 36 39 36 2D 58 20 20 20 20 20	EOLP-1696-X
56-59	4	Vendor rev	XX XX XX XX(note9)	ASCII (31 2E 30 20means 1.0 revision)
60-61	2	Wavelength	XX XX(note9)	XX
62	1	Reserved	00	
63	1	CC_BASE	Check Sum (Variable)	Check code for Base ID Fields
EXTENDED ID FIELDS				
64-65	2	Options	00 1A	TX_DISABLE, TX_FAULT and Loss of Signal implemented.
66	1	BR,max	00	
67	1	BR,min	00	
68-83	16	Vendor SN	XX XX XX XX XX XX XX XX 20 20 20 20 20 20 20 20(note9)	Serial Number of transceiver (ASCII). For example “B000822”.
84-91	8	Date code	XX XX XX XX XX XX XX XX(note9)	Manufactory date code. For example “080405”.
92	1	Diagnostic Monitoring Type	XX(note9)	Digital diagnostic monitoring implemented
93	1	Enhanced Options	XX(note9)	Optional flags
94	1	SFF_8472 Compliance	XX(note9)	01 for Rev9.3 SFF-8472.
95	1	CC_EXT	Check Sum (Variable)	Check sum for Extended ID Field.
VENDOR SPECIFIC ID FIELDS				
96-127	32	Vendor Specific	Read only	Depends on customer information
128-255	128	Reserved	Read only	

Note9: The “XX” byte should be filled in according to practical case. For more information, please refer to the related document of SFP Multi-Source Agreement (MSA).

Eoptolink

Digital Diagnostic Specifications

EOLP-1696-X transceivers can be used in host systems that require either internally or externally calibrated digital diagnostics.

Parameter	Symbol			Accuracy	Units	Ref.
Internally measured transceiver temperature	DD Temperature			±3	ºC	
Internally measured transceiver supply voltage	DD Voltage			±100	mV	
Measured TX bias current	DD Bias			±10	%	Note10
Measured TX output power	DD Tx-Power			±2	dB	
Measured RX received average optical power	DD Rx-Power			±2	dB	
Monitoring Range						
Internally measured transceiver temperature	DD Temperature	-5		70	ºC	
Internally measured transceiver supply voltage	DD Voltage	3.0		3.6	V	
Measured TX bias current	DD Bias	0		90	mA	
Measured TX output power	DD Tx-Power	-4		2	dBm	
Measured RX received average optical power	DD Rx-Power	-15		0.5	dBm	

*Note10. Accuracy of Measured Tx Bias Current is 10% of the actual Bias Current from the laser driver to the laser.

Eoptolink

Recommend Circuit Schematic

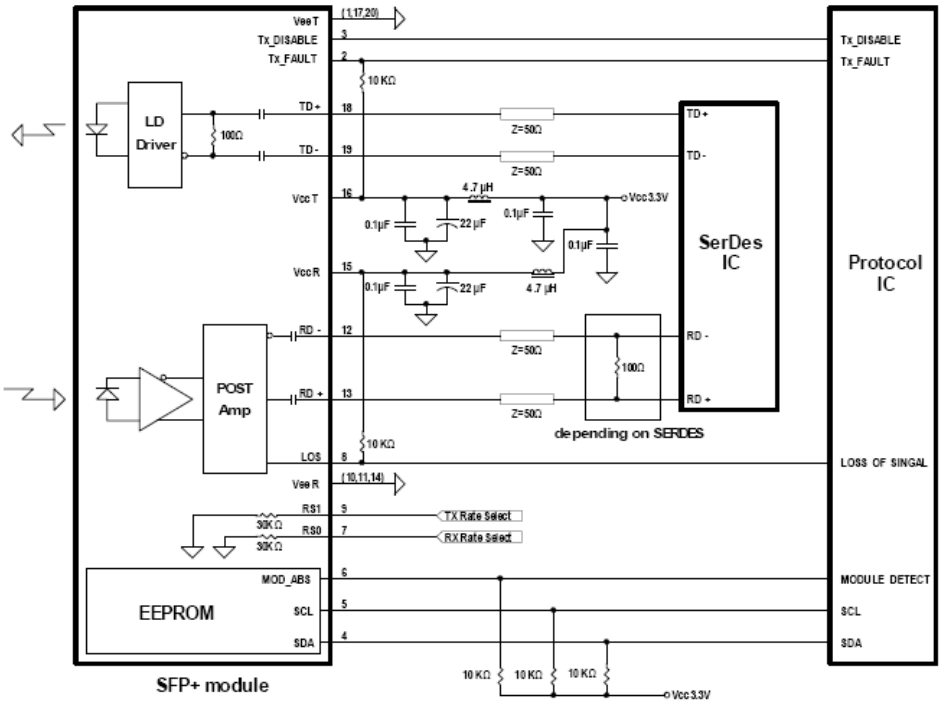

Mechanical Specifications

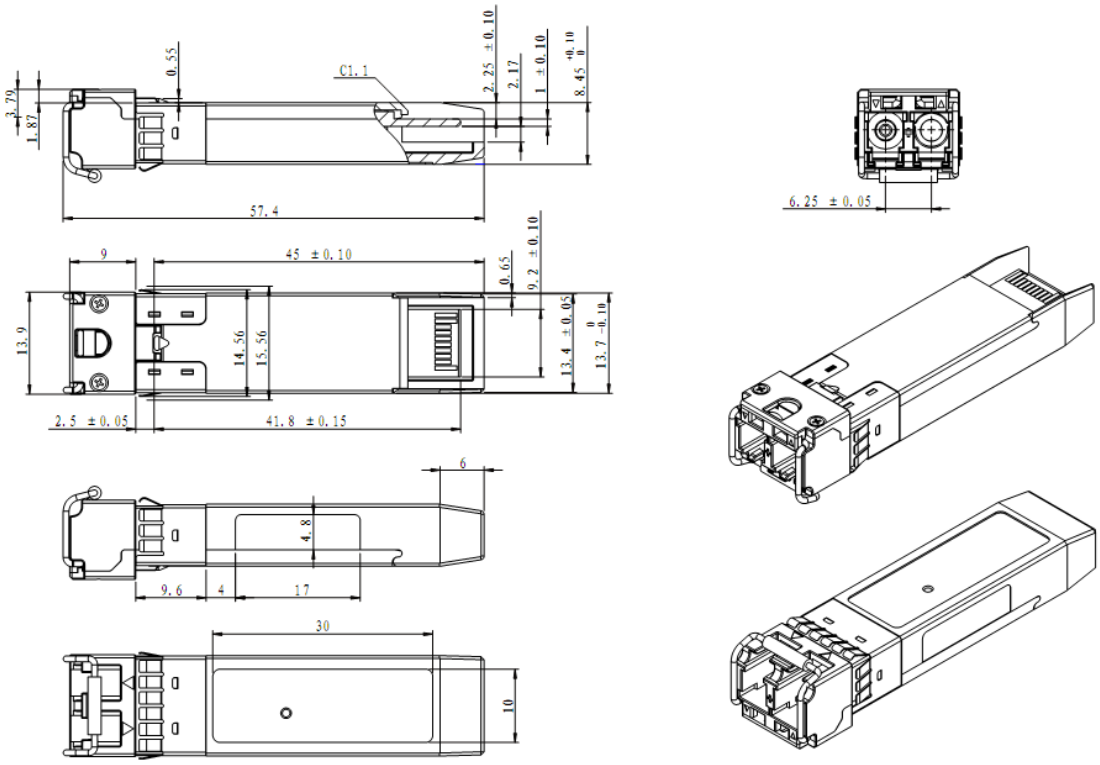

Eye Safety

This single-mode transceiver is a Class 1 laser product. It complies with IEC-60825 and FDA 21 CFR 1040.10 and 1040.11. The transceiver must be operated within the specified temperature and voltage limits. The optical ports of the module shall be terminated with an optical connector or with a dust plug.

Obtaining Document

You can visit our website: http://www.eoptolink.com
Or contact Eoptolink Technology Inc., Ltd. listed at the end of the documentation to get the latest documents.

Revision History

Revision	Initiate	Review	Approve	DCN	Release Date
V3.a	Kelly			Update PN	June 13, 2011
V4.0	Alex/Townie	Kelly		Update spelling mistake	Aug 10, 2011
V4.a	Townie	Kelly		Add power dissipation.	Aug 23, 2011
V4.b	Kelly			Correct output power range.	Oct 28, 2011

Eoptolink

Notice:

Eoptolink reserves the right to make changes to or discontinue any optical link product or service identified in this publication, without notice, in order to improve design and/or performance. Applications that are described herein for any of the optical link products are for illustrative purposes only. Eoptolink makes no representation or warranty that such applications will be suitable for the specified use without further testing or modification.

Contact:

Add: Floor 5 Building 2 No. 21 Gaopeng Avenue High-Tech District CHENGDU, SICHUAN 610041 P.R. CHINA
Tel: (+86) 028-85122709 ext 808 & 809

Fax: (+86) 028-85121912
Postal: 610041
E-mail: sales@eoptolink.com
http://www.eoptolink.com

Eoptolink